Hardware User's Manual

Digital Video Motion Detector
DVMD1

Revision B

October, 2004

Radiant, Inc.
2395 Kenwood Drive
Boulder, CO 80303
(303) 543-0440

INTRODUCTION

Radiant's Digital Video Motion Detector (DVMD) represents a new generation of Intelligent Video Processing. It incorporates adaptive signal processing technology to achieve highly sensitive detection in a wide range of operating environments with a very low nuisance alarm rate. This technology is especially good at handling noisy video sources such as uncooled infrared (IR) and light-intensified cameras. It adapts to changes in lighting and weather that have caused previous generations of video motion detectors to generate a high level of nuisance alarms. Because it works with many camera types, the DVMD can greatly enhance the effectiveness of video-based security systems operating in a wide range of indoor and outdoor environments.

This is a manual for the installation, setup, and configuration of the DVMD1. It contains step-by-step instructions for connecting the DVMD1 in a system. It outlines a variety of set-up features.

The minimum DVMD1 configuration must contain:

- At least one DVMD1 and Power Supply
- A 3.5 inch floppy diskette containing the PC program, Manager.*exe*, to communicate with the DVMD1 for set up and defining masked regions.
- This User's Manual.

The user must provide the following:

- A Windows based computer with a 3.5 inch floppy drive and a serial port
- An 8 to 40 volt power supply (AC or DC)
- A video camera which can be color, black & white, IR, or light-intensified
- A CCTV monitor
- A 9 pin M/F serial cable with straight-through connections
- At least two 75 ohm coaxial cables with BNC connectors

Any questions or comments regarding the DVMD1 Hardware User's Manual should be sent to:

Radiant, Inc.
2395 Kenwood Drive
Boulder, CO 80305

Phone: 303-543-0440
FAX: 303-543-2126

E-mail: lyle.powers@dvmd.com

Video Processor

The heart of all DVMD products is the Video Processor. The Video Processor contains an embedded Digital Signal Processor (DSP) that executes our proprietary Digital Video Motion Detector algorithm. The DVMD program, user settings, and masked areas are saved in the onboard flash memory. The module requires ½ watt of power at +3.3V and video input. It produces video output with overlay and alarm output.

The user may customize the Video Processor for site specific operating environments by means of a serial connection. The serial connection is to a PC that is executing the Manager.exe program. The Manager program brings up a window with a graphical user interface (GUI). The GUI allows the user to modify the performance of the DVMD by changing a variety of settings.

The Video Processor processes the incoming video with internal processing including DC restoration (clamping), automatic gain control (AGC), and filtering. It generates an overlay for the time, date, camera number, address, and target outlines and provides a buffered 1Vpp video output into a 75 ohm load.

The Video Processor is packaged in an encapsulated aluminum extrusion with a 20-pin DIN connector. The connector and two 4:40 screws are used to mount the Video Processor as a replaceable module. This design allows a wide variety of packaging.

The DVMD1 is a single channel product. The DVMD16 provides 16 channels. Users can easily design custom packaging to house the Video Processor.

All product packages must provide power for the Video Processor in addition to interface logic to the outside world and ALARM relays. Any serial connection scheme can be used including RS232, RS485 or RS422. The packaging must contain the necessary serial interface chips and connectors.

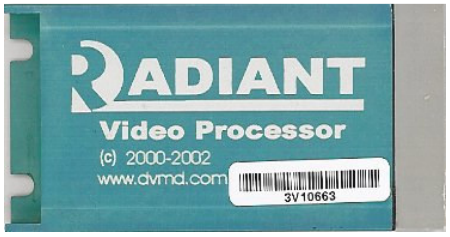

Figure 1 – 3.3V Video Processor

Operating Configurations

The DVMD1 is a standalone unit with its own Digital Signal Processor (DSP). It requires only power and video input and produces video output with overlay and a dry contact relay alarm. The user may wish to customize the performance of the unit to accommodate a site-specific operational environment. Connecting the DVMD1 to a PC through a serial cable and running the Manager program supplied with the unit allows the user to make setting and mask adjustments. The program brings up a window that allows the user to modify the DVMD1 performance by changing a variety of settings.

A security system with multiple video cameras may use multiple DVMD1 units that are chained together. Within such a system, each unit must be assigned a unique address. Chaining DVMD1 units and setting up the addresses is covered in a later section of this manual. When working with a single unit, the default address is 0. In the next section, setting the address of a single unit will be described.

Figure 2A illustrates the DVMD1 in the single-unit configuration. All of the signal processing and user settings are saved in the configuration portion of the onboard flash memory. This allows the DVMD to be configured for a variety of stand-alone applications.

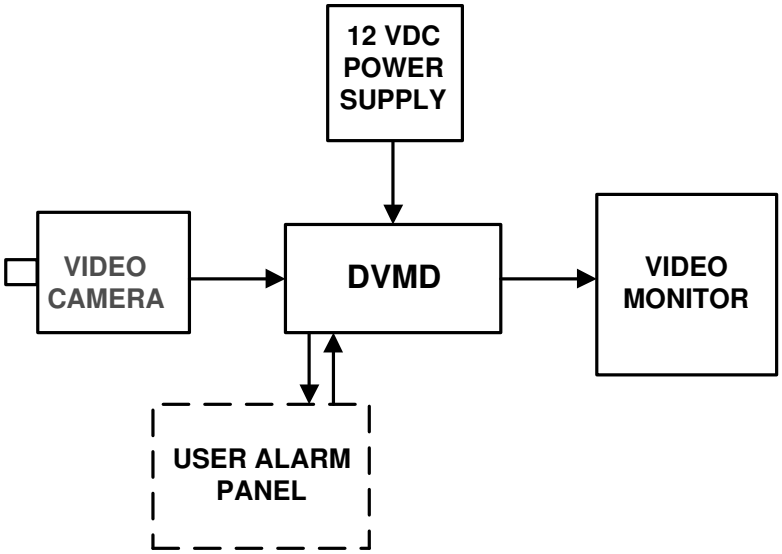

Figure 2A – DVMD1 Single Unit Configuration

Figure 2B illustrates a DVMD1 (address=FF0) connected to a host computer. The user may set mask regions, DVMD1 settings and the time and date are set through the bi-directional RS232 HOST port.

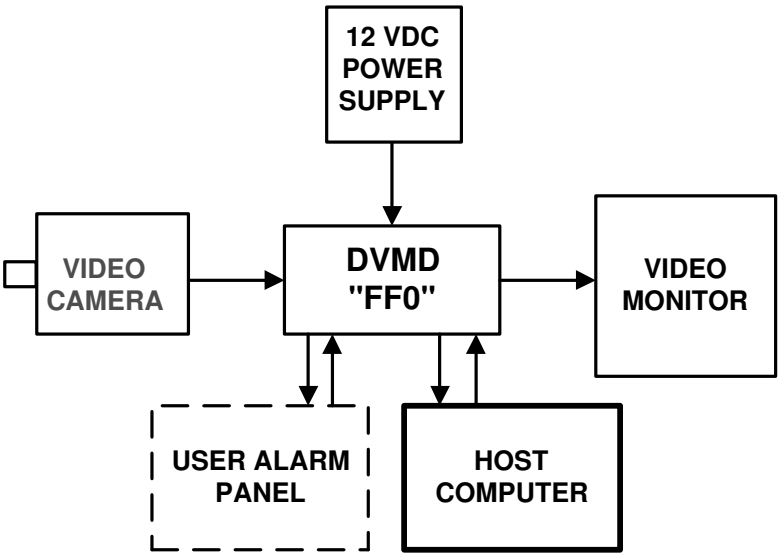

Figure 2B – DVMD1 Connected to Host Configuration

Figure 1C illustrates a block diagram of three DVMD chained together by the RS485 serial link. The host communicates to the first DVMD, which is chained to two other units. A common power supply insures that all units receive the RS485 data correctly.

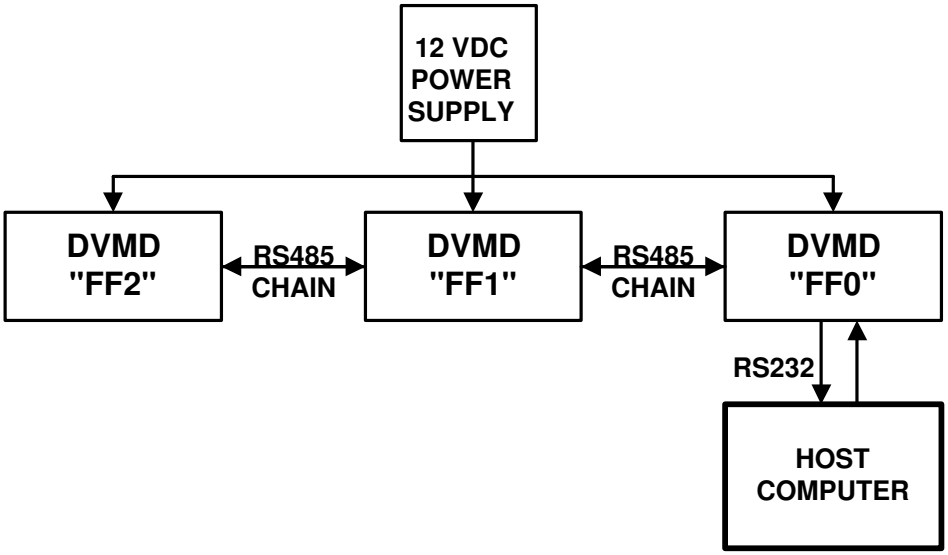

Figure 2C – DVMD Chained Configuration

DVMD UNIT OVERVIEW

The Digital Video Motion Detector (DVMD) measures 3.5"x5"x1.25" and is housed in an extruded aluminum case as shown in Figure 3.

Figure 3 – DVMD Unit

The unit receives video from the camera through the BNC connector labeled VIN and provides buffered video output (after internal processing, clamping, automatic gain control (AGC), and overlay) through the BNC connector labeled VOUT.

The Screw Terminal (Digikey 277-1166) provides access for +12 volt DC power, opto-isolated input and dry contact relay alarm output. The opto-isolated input is active when driven from an external voltage source between 4 to 24 volts. The function of the opto-isolated input is application dependent. A dry contact relay alarm output is also provided. The pin connections for these functions are shown in Table 1 below.

PIN NUMBER	PIN CONNECTION	FUNCTION
Pin 1	V+	+12VDC
Pin 2	V-	Ground
Pin 3	I+	Opto-Isolated input + terminal (External 4-24 VDC)
Pin 4	I-	Opto-Isolated input - terminal (External Ground)
Pin 5	NC	Alarm Relay Normally Closed
Pin 6	COM	Alarm Relay Common
Pin 7	NO	Alarm Relay Normally Open

Table 1 – Screw Terminal Pin Connections and Functions

ALARM RELAY USAGE
The alarm relay contact information is on the NC, COM and NO connectors. NC is normally closed when the power is "off" to the DVMD1. NO is normally open when power is "off" to the DVMD1. Most users will need the NO and COM terminals. The NC terminal is brought out to provide both options.

Most alarm systems need to OPEN when:
1. There is an alarm.
2. There is a power loss to the DVMD
3. There is a broken wire from the NO and COM wires to the host

The DVMD1 is designed to do all three functions using the NO and COM terminals.
When the power is "OFF" NO is OPEN
When there is an alarm NO is OPEN
When there is a broken wire NO "looks" OPEN.

HOST CONNECTOR
Serial communications to the Host Computer is via RS232 channel at 19,200 baud, 8 bits, no parity, and two stop bits. Table 2 shows the Pin Connection and Functions for the Serial Port. Pin 1 is on the right with the tab up.

RJ12 PIN NUMBER	COLOR	FUNCTION
Pin 1	WHITE	RS232 Data Transmitted to PC
Pin 2	BLACK	Ground
Pin 3	RED	CHAIN RS485 Data -
Pin 4	GREEN	CHAIN RS485 Data +
Pin 5	YELLOW	Ground
Pin 6	BLUE	RS232 Data Received from PC

Table 2A – Host Port Pinout

The connections are made with an RJ12 connector crimped on a 6-wire phone cord. Purchase Digikey H2442-25 for short runs up to 25 feet. Intermediate runs to 100 feet need:
1. Digikey part number A9118 (100 pcs of Amp's crimp connector PN 5-555042-3)
2. Digikey part number H0063-100 specifies 100 feet of 6-conductor black phone cord.
3. Digikey part number PAL1545.1 for an inexpensive crimp tool.

A modular adaptor is needed to connect the DVMD1 to a serial port on the HOST. Table 2 shows the pinout of the DB9 connector. Purchase Digikey 046-0003 or LCOM REC096F or Pan Pacific makes the "ADM-9F6-GR", carried by Fry's/Outpost.com as 2402370.

DB 9 PIN NUMBER	Serial Adapter Color	FUNCTION
Pin 2	White	RS232 Data Transmitted to PC
Pin 3	Blue	RS232 Data Received from PC
Pin 5	Black	Ground

Table 2B – DB9 Female Adapter Pinout

DB9	COLOR	FUNCTION	RJ12
2	WHITE	TXD-->PC	1
3	BLUE	RXD<--PC	6
5	BLACK	GROUND	2

RJ12 PIN ONE IS ON THE RIGHT WITH THE TAB UP

Table 2C – DB9 Female Adapter Photo

INTERNAL JUMPER SETTINGS FOR PTZ PORT

ENABLE JUMPER: The ENABLE jumper (See Figure 3) forces the RS422 line drivers to be continuously enabled when installed. When this jumper is left open, the line drivers are enabled only during data transmission. When left open, the drivers are enabled by the output of a a one-shot that is triggered on the negative going edge of each bit and lasts for 3-4 character times at 300 baud for full duplex operation.

PROTOCOL JUMPERS: Two PROTOCOL jumpers (See Figure 2D) allow the DVMD1 to drive either RS232 or RS422/RS485 type PTZs. These two jumpers must always be moved as a pair. The RS232 protocol is selected when these jumpers are connected from the CENTER to the LEFT posts. The RS422/RS485 protocol is selected when these jumpers are connected from the CENTER to the RIGHT posts.

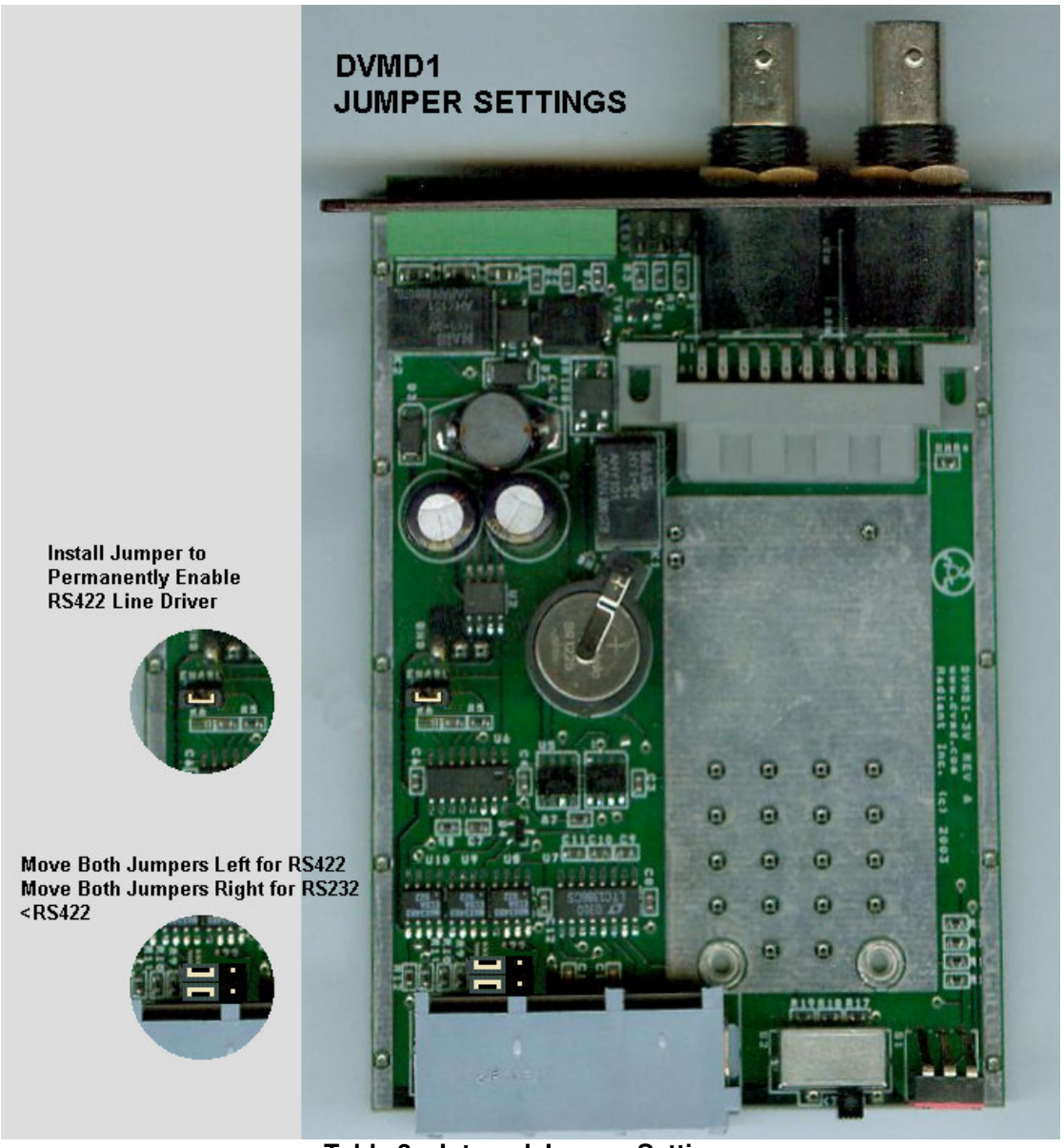

Table 3 – Internal Jumper Settings

CONNECTION INSTRUCTIONS

Connecting the DVMD to a camera and computer is a simple process. The connections should be accomplished in the sequence outlined below.

- **Step One:**

  Connect the +12 VDC Power Supply by attaching the positive supply output to V+ and ground to V-. These screw connectors are located on the Front Panel of the DVMD (See Figure 4).

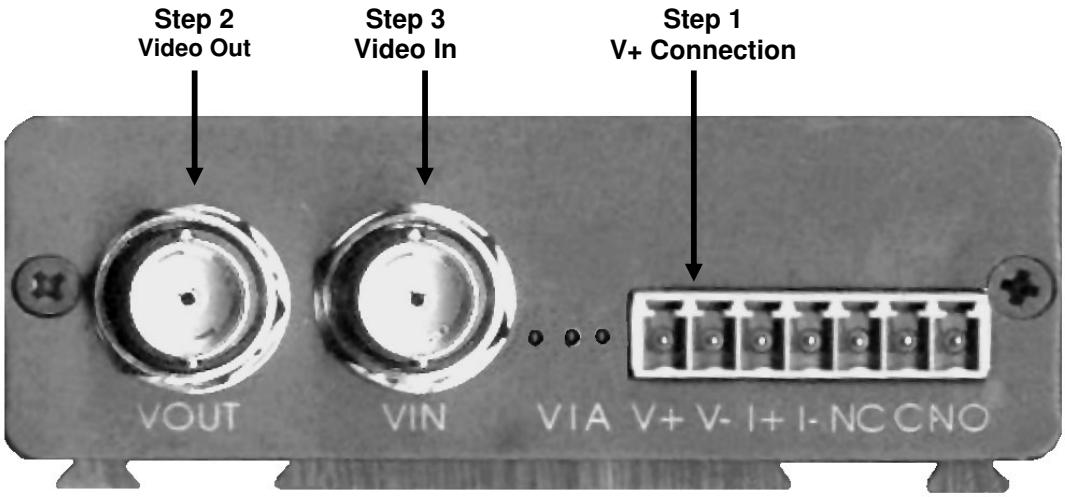

Figure 4 – DVMD Front Panel

- **Step Two:**

  Connect a 75 ohm Coaxial Cable from the VOUT BNC connector located on the DVMD Front Panel (See Figure 3) to the Video In port on a CCTV Monitor.

- **Step Three:**

  Connect a second 75 ohm Coaxial Cable from the VIN BNC connector on the DVMD Front Panel (See Figure 3) to the Video Out port on a camera.

- **Step Four (Rev B Hardware):**

Connect the HOST RS232 connector (See Figure 5) to a host PC serial port using a 6 conductor phone wire to the RJ12<->9 pin male/female adapter. Connection to the DB9 side requires only three wires for pins 2, 3, and 5.

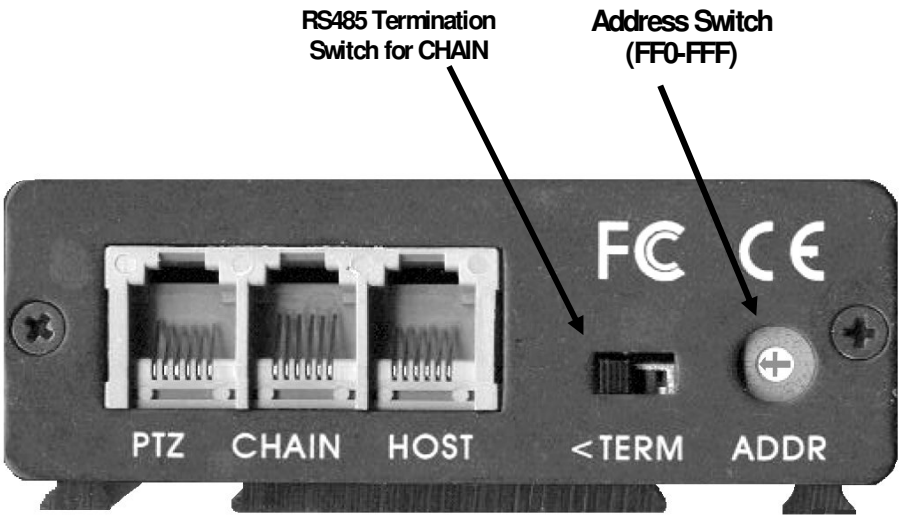

Figure 5 – DVMD1 Rev B Rear Panel

- **Step Five:**

Set the Unit Address switch to “0” for single DVMD installations. All DVMD units are mapped into the address range 0xFF0 to 0xFFF. The Unit Address rotary switch selects the least significant digit (0-F). Turn the rotary switch to “0” to select Unit Address 0xFF0. (See Figure 5) For systems with multiple DVMD units, chained together by the RS485 bus, each individual Unit Address switch must be set to a unique number from “0” to “F”. The physical Unit Address must match the last digit entered in the “Unit Address” menu in the user interface.

- **Step Six:**

The RS485 CHAIN switch must be terminated for the first and last units in the CHAIN. All other DVMD1 termination switches must NOT be terminated. A six-conductor phone wire may be used to connect from the CHAIN output of the first unit (FF0) to the next unit.

The REV A product has separated CHAIN inputs. The Rev B products use the HOST connector for two functions: RS232 to the host, and as the CHAIN-IN connection for subsequent units on the RS485 bus. The CHAIN cables may be up to 100 feet in length, with a total length of 1000 feet. The CHAIN phone cables are crimped with the white wire to the right with the tab up on both ends of the cable.

- **Step Seven:**

  Power up the camera, the CCTV monitor and the DVMDs. You should get a video picture with overlay on the monitor. If you do not get a picture on the monitor re-check Steps 1 – 6 above. If you do get a video image on the monitor, proceed with loading the User Interface Software as described in the User Interface – Manager Tools Window paragraph below.

  If the power to the DVMD is off, the video from the camera is connected directly to the CCTV monitor through an internal video bypass relay. In the power off state, no DVMD functions occur, and no overlay is generated.

- **Step Eight (Optional PTZ Support)**
  Connect a system output to the Auxiliary Input (Auxin) screw terminals. Force the output bit high to disable the DVMD1 alarms and put the product into PAN mode. The PAN overlay will appear. Move the PTZ camera to the desired new position and wait for the camera to stop moving. Clear the output bit that allows the DVMD to learn the new scene in 1 second and look for motion.

User Interface – Manager

The 3.5 inch floppy diskette contains the *Manager.exe* program which provides the user interface to the DVMD. Power up the PC and insert the 3.5 inch floppy diskette into the floppy drive. You may run *Manager.exe* from the floppy drive or save the file to the hard drive and run the program there. Locate the *Manager.exe* file on the floppy drive or hard drive and double click on *Manager.exe*.

Please refer to the DVMD Software User's Manual for further information.